ISBN: 978-3-95450-215-8 ISSN: 2226-0366 doi:10.18429/JACoW-LINAC2022-THPOJO07

STATUS AND RELAIBILITY ENHANCEMENTS OF THE ALBA LINAC

D. Lanaia, R. Muñoz Horta, F. Pérez, ALBA Synchrotron, Cerdanyola del Vallès, Spain

Abstract

The pre-injector of the ALBA Synchrotron is a Linac that delivers 110 MeV electrons during regular operation. It consists in two Pre-bunchers, a Buncher and two Accelerating Sections fed by two pulsed 37 MW klystrons. Along the years, efforts to enhance the ALBA Linac performance and reliability have been devoted, resulting in an improvement of the Linac to Booster beam transmission efficiency, and of its Mean Time Between Failures (MTBF). The performance enhancement has been based on the use of optimization and control routines of the beam parameters (such as beam position and energy), but also by the application of regular preventive hardware maintenance procedures. Besides, the Linac reliability has been improved also by the implementation of alternative working modes in case of hardware failures, like operating at 67 MeV, with only one klystron and one Accelerating Section. In this respect, a new upgrade of the RF waveguide system is being implemented, with the aim to produce 80 MeV electron beam using only one klystron that will feed both Accelerating Sections. At this energy the injection to the Booster is expected to be more stable than with the existing 67 MeV mode. Furthermore, the possibility to install a thermionic RF-gun to inject directly into the first Accelerating Section is under study. This new gun will be installed in addition to the existing system, and will allow handling in short time any failure either from the DC-gun, the Pre-bunchers or the Buncher, ensuring the Linac's reliability even in case of a major event. Details of the Linac performance during the past years and a description of the new hardware upgrades are presented in this work.

INJECTOR WORKING MODES

Linac Operation Versality

Two TH2100 klystrons (KA1 and KA2) power the ALBA Linac. In its nominal operation mode, KA1 feeds the Buncher cavities and the first Accelerating Section (AS1) whereas KA2 feeds exclusively AS2 [1].

Along the years other operation modes have been developed with the aim to enhance the reliability, not only of the ALBA Linac, but also of the ALBA injector.

In 2014, after a Linac waveguide upgrade, the ALBA injector was provided with the Single Klystron Injection Mode. This mode allows injecting a 67 MeV electron beam into the Booster using only one klystron (either KA1 or KA2), which feeds the Buncher and AS1 [2]. In fact, this mode has been also commissioned at 60 MeV to overcome arcs in the waveguide, although being less stable than the 67 MeV beam.

After an RF-window incident at AS1, such low energy beam was also injected into the Booster by operating with two klystrons while keeping AS1 disconnected: KA1 fed the Buncher and KA2 fed AS2. A summary of the ALBA injector different working modes is shown in Table 1.

Table 1: ALBA injector modes. The modes in grey are being implemented, but not tested.

Energy [MeV]	KA1	KA2	Cavities fed
110	On	On	BU + AS1 + AS2
67 (60)	On	Off	BU + AS1
67 (60)	On	Off	BU + AS1
67 (60)	On	On	BU + AS2
80	On	Off	BU + AS1 + AS2
80	Off	On	BU + AS1 + AS2

Injecting into the Booster at 60 or 67 MeV is not straightforward [3]. The injection to the Booster at lower beam energies is affected by strong Booster magnetic field distortions produced by eddy currents induced at the bending magnet vacuum chambers. Because of its complexity this mode is tested every 6 months, to have it operationally when needed. Since its implementation, this mode has been required and used during the operation of ALBA for users at least in two occasions.

At present, another waveguide upgrade is being implemented at the ALBA Linac to feed all Linac cavities with only one klystron with the aim to inject a 80 MeV* beam into the Booster. The new waveguide configuration is shown in Fig. 1. The RF power sent by Klystron 1 to AS1 is now split in two equal branches: 50% to feed AS1 and 50% to feed AS2. As a consequence, for the same klystron power more cavities are fed. The total voltage applied to the electron beam increases by a factor $\frac{2}{\sqrt{2}}$.

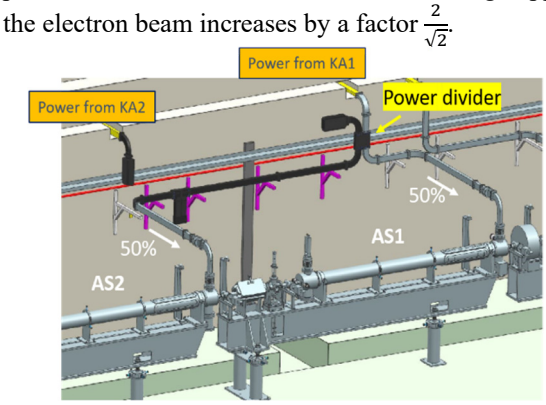

Figure 1: Waveguide modification for Single Klystron Injection Mode at 80 MeV.

* With KA1 at nominal power, a 92 MeV beam should be achieved. However, arcs in the waveguide constrain the power delivered by KA2.

Content from this work may be used under the terms of the CC BY 4.0 licence (© 2021). Any distribution of this work must maintain attribution to the author(s), title of the work, publisher, and DOI

ISBN: 978-3-95450-215-8 ISSN: 2226-0366 doi:10.18429/JACoW-LINAC2022-THPOJO07

Content from this work may be used under the terms of the CC BY 4.0 licence (© 2021). Any distribution of this work must maintain attribution to the author(s), title of the work, publisher, and DOI

This is an upgrade of the Single Klystron Working mode since a 80 MeV beam is more stable than the 60 and 67 MeV beam. If this mode works smoothly it is under consideration to be set as the new nominal operation mode of the ALBA injector because it shall provide a stable and efficient injection using less RF-power. The full modified system is expected to be operational at the beginning of 2023.

The RF-gun System Project

The implementation of a RF-gun system in the Linac bunker is currently under study. The main motivation for this upgrade is to have the means to overcome a failure of the Buncher cavity. The Buncher compresses and accelerates the electron beam up to 16 MeV and, at present, it is not possible the injection into AS1 without this cavity. Besides, the RF-gun system would serve as well as backup in case of failure of any other subsystem placed before AS1, such as the Pre-buncher cavities and the thermionic DC-gun.

The new RF-gun system should deliver 3 MeV beam from a thermionic RF-gun, that will be filtered and compressed by an alpha-magnet and then injected into AS1. The RF-gun system will be installed in one side of the Linac, see Fig. 2.

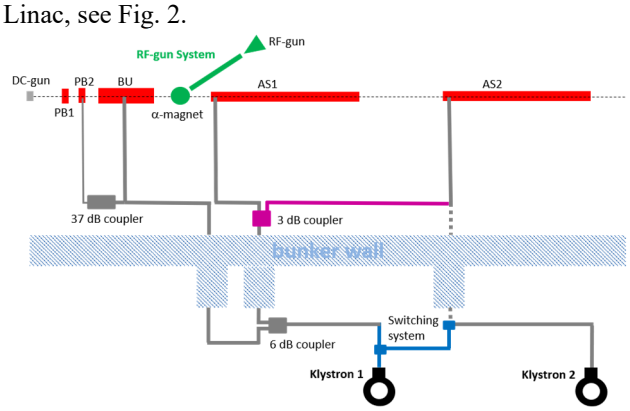

Figure 2: Linac RF distribution schematic: waveguide switching system installed in 2014 (in blue), the recently implemented power split at AS1 (in purple) and the new RF-gun system project (in green).

At the entrance of AS1, electrons are expected to have up to 0.3 nC/bunch, 20 ps pulse width and low energy spread (below 0.3 MeV). A chopper system will modulate the pulses at 500 MHz to allow injection in Single- or in Multi-Bunch Mode (SBM or MBM) at a repetition rate of 3 Hz. The RF-gun will be fed by the RF power available when the Buncher is not used, which is of 5 MW. Beam energies of 80 MeV (with only KA1) and 67 MeV (with only KA2) will be achieved at the linac exit.

LINAC PERFORMANCES

The ALBA Linac is delivering beam for users since 2012 and operating in top-up mode since 2014. The operation of the Linac along the past years has improved in reliability and stability. The Mean Time Between Failures (MTBF) since 2015 onwards has held steady, being of 19 days in average, although of almost 30 days along 2021. Linac failures can have different impacts on the stored beam in the ALBA Storage Ring (SR), as it is shown in Fig. 3: no stored beam at all (*SR down-time*), problems to reinject in top-up mode that last more than 20 minutes (*SR decay-mode*) and short delays during top-up reinjections (*SR injection delay*). It must be emphasized that the SR down-time is zero since 2019 and that in 2021 no Linac issue caused SR decay-mode operation. Last big event that caused a long SR down-time was in 2017, when a RF-window broke. Besides, SR injection delays have been as well reduced along the years, counting only 4 injection delay events along 2021, which meant a total delay of 13 minutes.

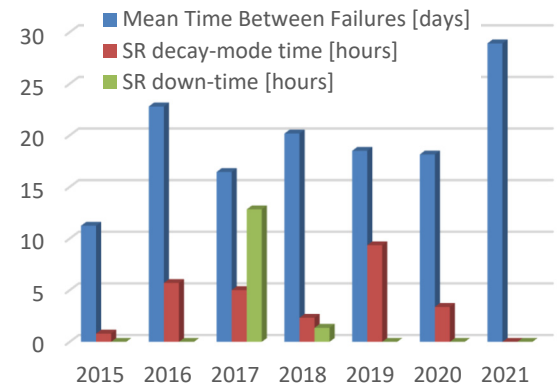

Figure 3: Linac Mean Time Between Failures and impact of Linac events on the SR beam.

Most regular source of SR injection delay events are klystron interlocks caused by reflected power or internal arcs. Efforts in optimizing klystron parameters and in keeping a regular performance monitoring have reduced the amount of klystron interlocks during the last few years (see Fig. 4). In average, 1 interlock is archived every 10 hours of operation for KA1. Still, their impact on the Linac operation is very low.

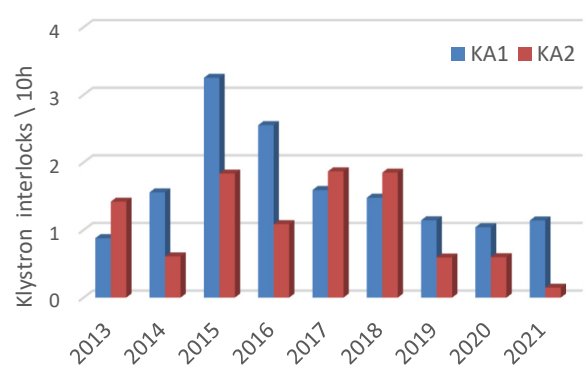

Figure 3: Klystron interlocks every 10 hours of operation.

Besides minor failures like power supply or RF-amplifier malfunctions, the main causes of the Linac events along its operating life have been: arcs in waveguides (filled with SF6 gas), broken RF-windows, electron gun cabinet leakage current episodes with electronic consequences in the cathode driver board, issues with RF-cavities cooling system, internal water leak in AS1, vacuum

ISBN: 978-3-95450-215-8 ISSN: 2226-0366 doi:10.18429/JACoW-LINAC2022-THPOJO07

degradation due to ion pump malfunction, and sparks inside the klystron modulator.

Hardware Maintenance and Upgrades

Most Linac events have been overcame by hardware modification as well as by enhancing the diagnostic systems with arc detectors on the waveguides, UV-detectors in klystron modulator cabinets or by adding an online beam energy measurement using a calibrated Beam Position Monitor (BPM) at Linac to Booster transfer line (LTB) [4].

Furthermore, preventive maintenance procedures are regularly executed and constantly updated. In parallel, data acquisition and parameter control routines and alarms have been reinforced in order to get information of hardware malfunction to anticipate potential. As a result, hardware replacement and hardware upgrades have been applied in many subsystems after early fault detection.

Troubleshooting procedures are as well available at the ALBA control room, with clear instructions to the operator to minimize the time needed to solve any Linac incident. The instructions include calling an expert for support, if needed.

Finally, a database to keep track of the spare parts and of the installed elements track record is permanently updated. It contributes enormously to minimize the reaction time in case of failures.

BEAM OPTIMIZATION IMPROVEMENT

In 2018 the Linac beam optimization process was investigated in detail, resulting in the implementation of optimization routines based with the Nelder-Simplex algorithm, making the optimization process more robust and simpler [5, 6].

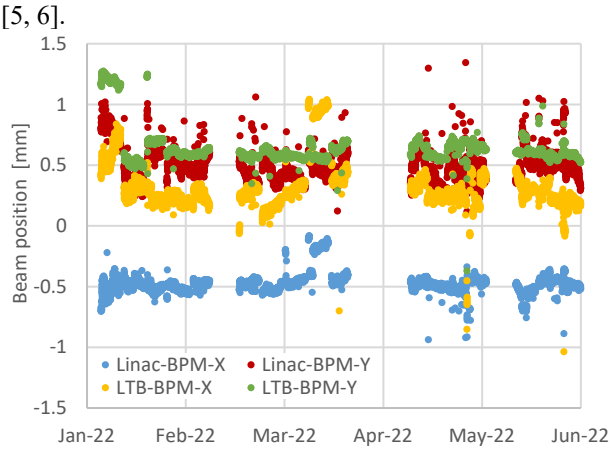

Figure 4: Beam position at Linac exit and beginning of LTB along first half of 2022.

Once the beam energy and energy spread are set, the Linac steering and focusing elements are optimized by the *steering.m* and *lenses.m* routines, to adjust the magnetic fields of the steering and focusing elements along the Buncher, with the aim to minimize beam losses. The optimization of the focusing elements is performed for SBM and MBM, since space-charge effects act differently in both modes.

The beam divergence at the Linac exit is then minimized to optimize the alignment along the LTB and also for having a better matching into the Booster. Once the optimization is finished, the beam position read by BPMs at Linac exit and at the beginning of the LTB are set as *golden orbit*. In this way, the beam position and divergence at Linac exit can be restored. In case of orbit deviation, an alarm beeps and the orbit is corrected with *acliOrbit.py* routine. Fig. 5 shows the BPMs readings along the first half of 2022, which, despite the day/night thermal variations, show that the Linac beam divergence is kept quite stable.

With the new optimization process the Linac beam transmission at the end of the LTB is stable around 95%. The maximum transmission from Linac to Booster is of 85%, but it is difficult to keep stable in time due to the pulsed elements drifts and jitter. The yearly average beam transmission from Linac to Booster in 2022 has been of 55%, which is the double with respect to 2015, as it is shown in Fig. 5.

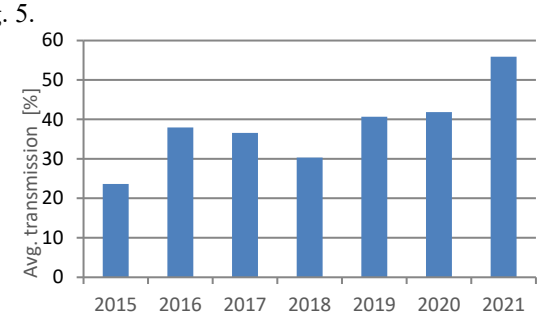

Figure 5: Yearly evolution of average Linac to Booster transmission efficiency.

The Linac beam is optimized at the start of the run and then it is revised weekly, unless a subsystem malfunction is detected. When it is well adjusted, the initial settings use to be stable and hold good several weeks with minor changes. Linac beam parameters are monitored at every injection by the *InjectionOnline.py* routine, including cavities' phases and amplitudes, which are monitored by a digital low-level RF system in operation since 2020. A robust alarm network warns in case of position drifts, temperature variations or devices misfunctioning. All these, are ways to increase the injector reliability.

CONCLUSIONS

The ALBA injector has been reliably running for ten years, eight in top-up mode. Exhaustive preventive maintenance contributes to reduce the number of interlocks and major failures during user operation. Hardware upgrades, such as the Single Klystron Working mode have enhanced the Linac operation reliability. Future projects like the RF-gun installation, now under study, are as well intended to maintain good and reliable performances of the ALBA injector also in sight of the ALBA II upgrade.

ACKNOWLEDGEMENTS

We would like to thank Michele Carlá for his always useful advices and readiness to help.

Content from this work may be used under the terms of the CC BY 4.0 licence (© 2021). Any distribution of this work must maintain attribution to the author(s), title of the work, publisher, and DOI

ISBN: 978-3-95450-215-8 ISSN: 2226-0366 doi:10.18429/JACoW-LINAC2022-THPOJO07

Content from this work may be used under the terms of the CC BY 4.0 licence (© 2021). Any distribution of this work must maintain attribution to the author(s), title of the work, publisher, and DOI

REFERENCES

[1] M. Pont *et al.*, "Operation of the ALBA Injector", in *Proc. IPAC'11*, San Sebastián, Spain, 2011, pp. 3023-3025.

[2] R. Muñoz Horta *et al.*, "Implementation of Single Klystron Working Mode at the ALBA Linac", in *Proc. IPAC'14*, Dresden, Germany, 2014, pp. 2276-2278. doi:10.18429/JACoW-IPAC2014-WEPME010

[3] G. Benedetti *et al.*, "Commissioning of the ALBA Injector with 67 MeV Single Klystron Linac", in *Proc. IPAC'16*, Busan, Korea, 2016, pp. 2905-2907. doi:10.18429/JACoW-IPAC2016-WEPOW033

[4] R. Muñoz Horta *et al.*, "Linac Energy Jitter Measurements with SPARK BPMs at ALBA", in *Proc. IPAC'19*, Melbourne, Australia, 2019, pp. 833-836. doi:10.18429/JACoW-IPAC2019-MOPTS002

[5] E. Marin *et al.*, "Optimization of the ALBA LINAC Operation Modes", in *Proc. IPAC'19*, Melbourne, Australia, 2019, pp. 1086-1089. doi:10.18429/JACoW-IPAC2019-MOPTS095

[6] R. Muñoz Horta *et al.*, "Linac-To-Booster Optimization Procedure Towards High Transmission for the ALBA Injector", in *Proc. IPAC'21*, Campinas, SB, Brazil, 2021, pp. 1703-1706. doi:10.18429/JACoW-IPAC2021-TUPAB134